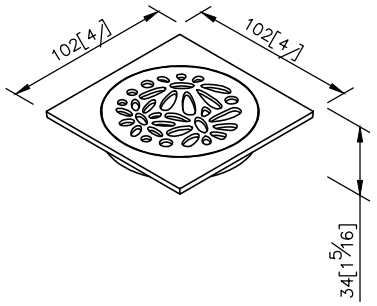
102[4]
102[4]
34[1 5/16]

unit: mm[inch]

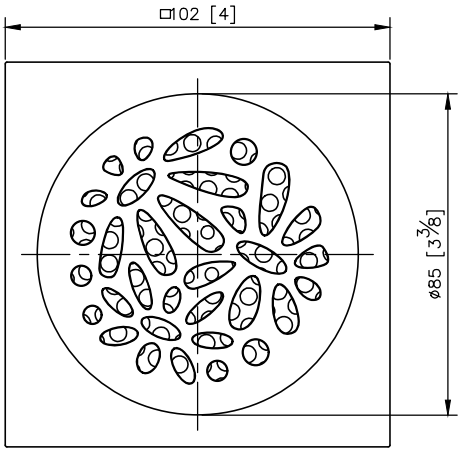
□102 [4]
ø85 [3 3/8]

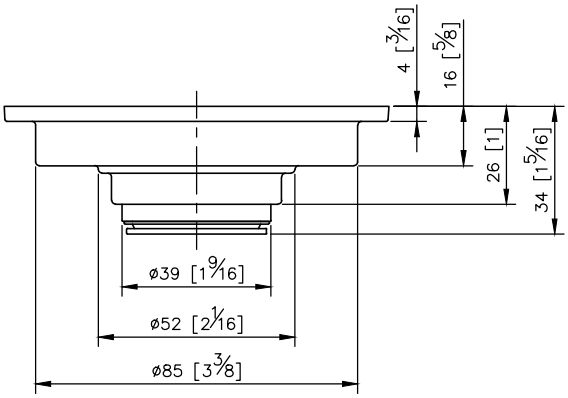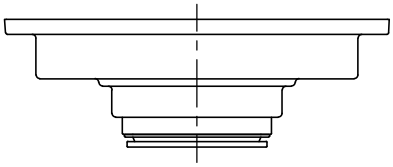
4 [3/16]
16 [5/8]
26 [1]
34 [1 5/16]
ø39 [1 9/16]
ø52 [2 1/16]
ø85 [3 3/8]