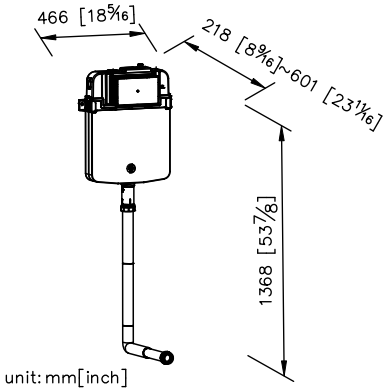

Concealed Cistern

6373-P3-8000
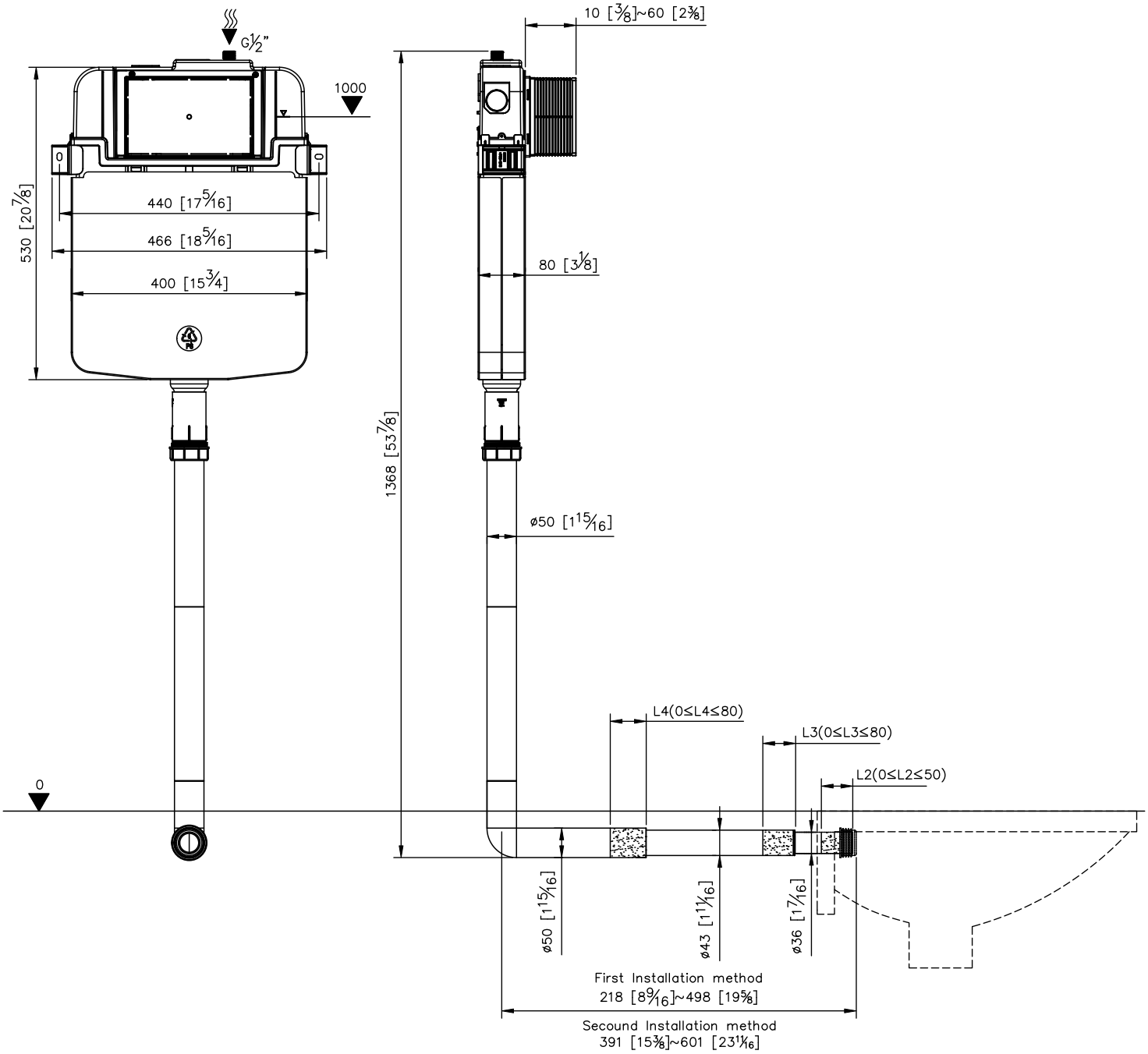
1.In-wall cavity dual flush cistern.
2.Top inlet entry.
3.Flush pipe, key seal & fixings included.
4.Two dual-flush configurations available: 6L/3L.
5.Product Size: 466*218*1368mm.