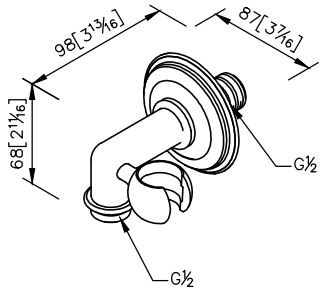
98[3 13/16]
87[3 7/16]
68[2 11/16]
G½
G½

unit: mm[inch]

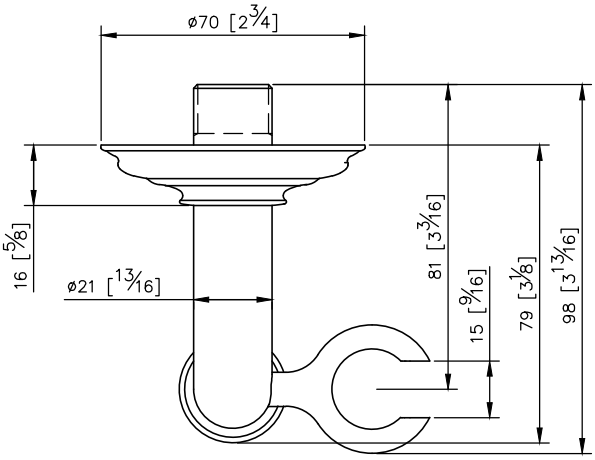
ø70 [2 3/4]
16 [5/8]
ø21 [13/16]
81 [3 3/16]
15 [9/16]
79 [3 1/8]
98 [3 13/16]

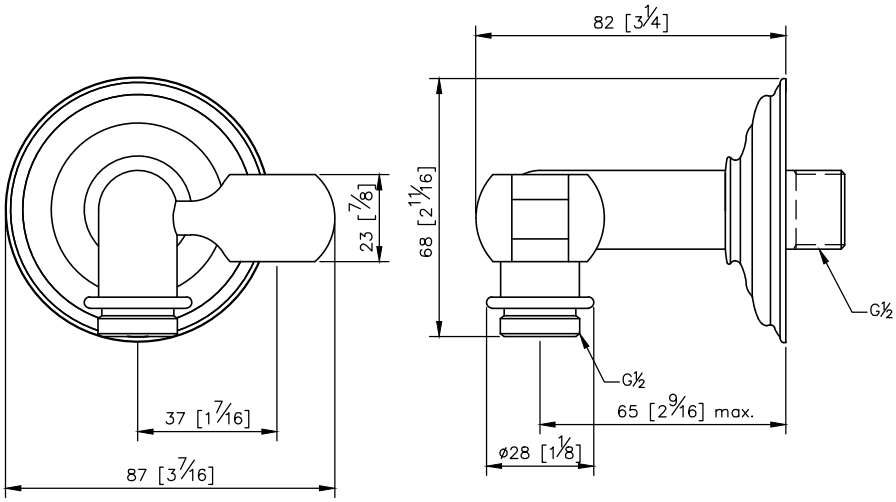
82 [3 1/4]
68 [2 11/16]
23 [7/8]
G½
G½
37 [1 7/16]
87 [3 7/16]
65 [2 9/16] max.
ø28 [1 1/8]