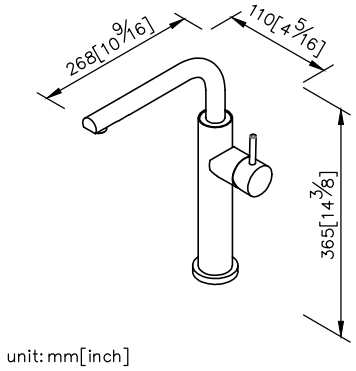
268[10 9/16]
110[4 5/16]
365[14 3/8]
unit: mm[inch]

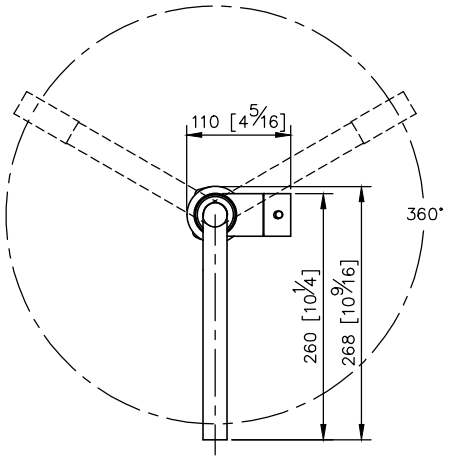
110 [4 5/16]
360°
260 [10 1/4]
268 [10 9/16]

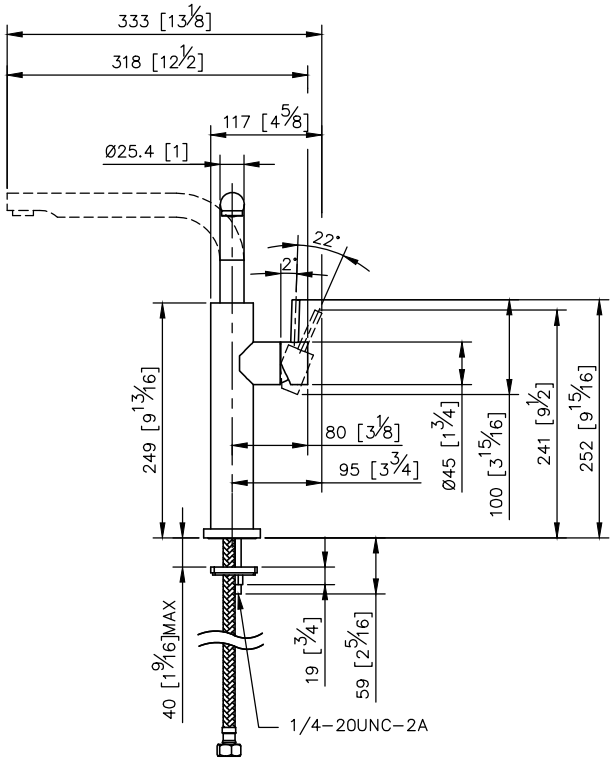
333 [13 1/8]
318 [12 1/2]
117 [4 5/8]
Ø25.4 [1]
22°
2°
249 [9 13/16]
80 [3 1/8]
95 [3 3/4]
Ø45 [1 3/4]
100 [3 15/16]
241 [9 1/2]
252 [9 15/16]
40 [1 9/16]MAX
19 [3/4]
59 [2 5/16]
1/4-20UNC-2A

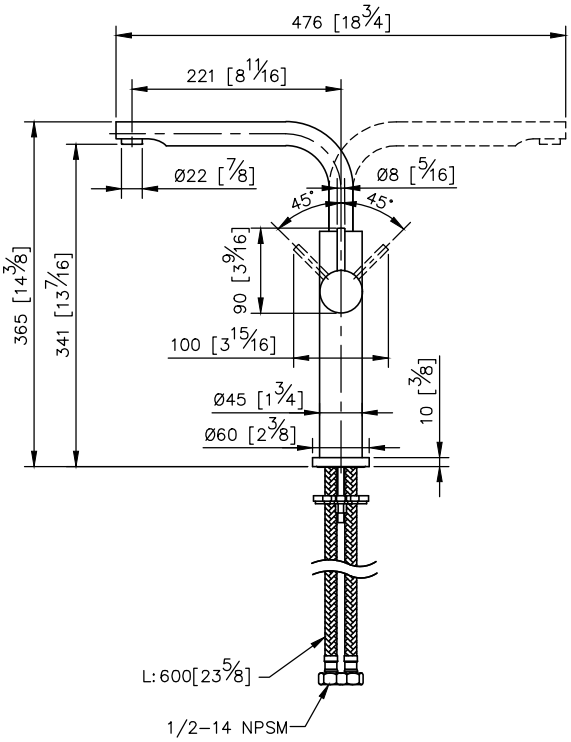
476 [18 3/4]
221 [8 11/16]
Ø22 [7/8]
Ø8 [5/16]
45°
45°
365 [14 3/8]
341 [13 7/16]
90 [3 9/16]
100 [3 15/16]
Ø45 [1 3/4]
Ø60 [2 3/8]
10 [3/8]
L: 600[23 5/8]
1/2-14 NPSM