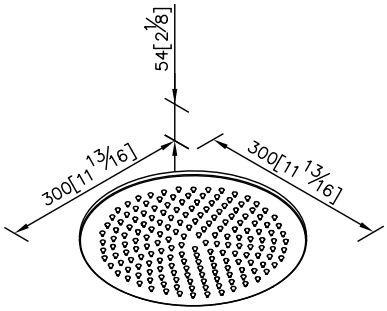
54[2 1/8]
300[11 13/16]
300[11 13/16]

unit: mm[inch]

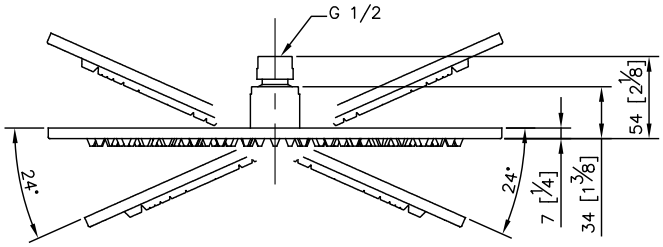
G 1/2
54 [2 1/8]
24°
24°
7 [1/4]
34 [1 3/8]

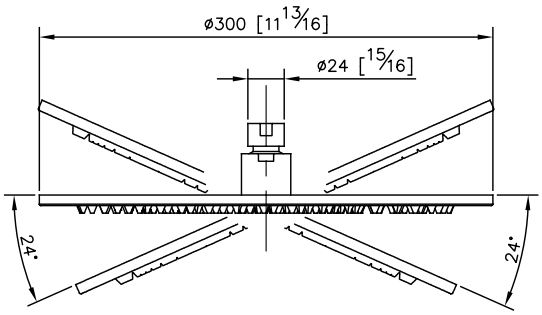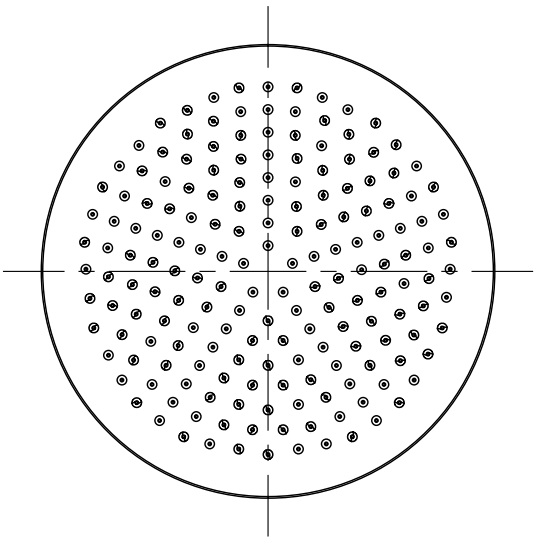
ø300 [11 13/16]
ø24 [15/16]
24°
24°