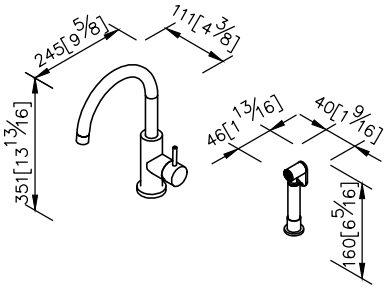
245[9 5/8]
111[4 3/8]
351[13 13/16]
46[1 13/16]
40[1 9/16]
160[6 5/16]

unit: mm[inch]

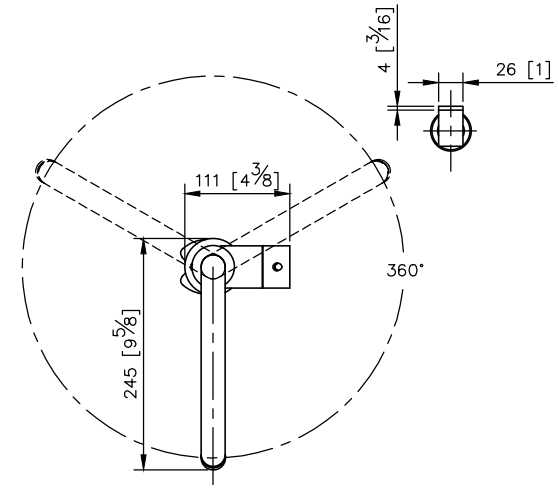
4 [3/16]
26 [1]
111 [4 3/8]
360°
245 [9 5/8]

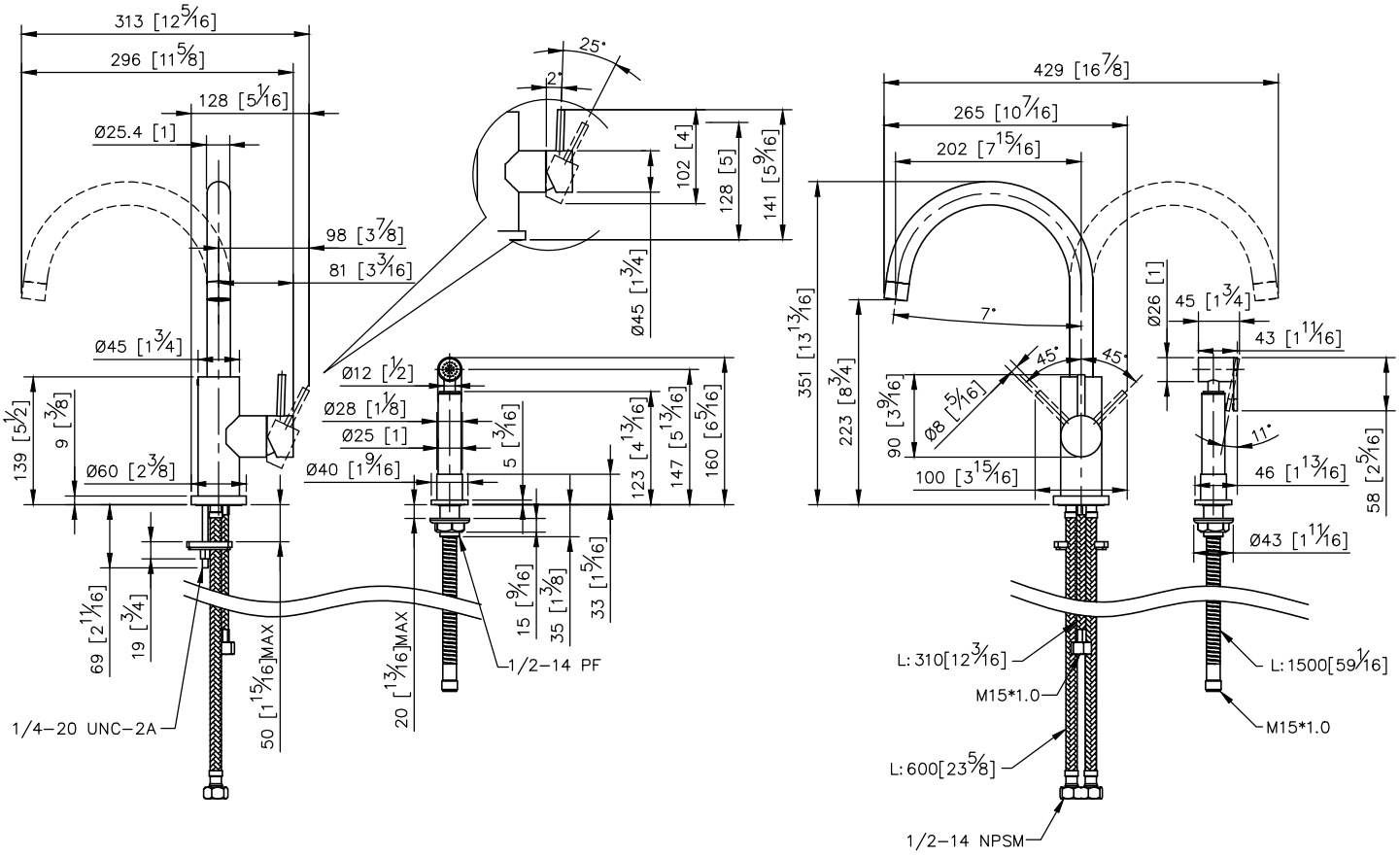
313 [12 5/16]
296 [11 5/8]
128 [5 1/16]
Ø25.4 [1]
98 [3 7/8]
81 [3 3/16]
Ø45 [1 3/4]
139 [5 1/2]
9 [3/8]
Ø60 [2 3/8]
69 [2 11/16]
19 [3/4]
50 [1 15/16]MAX
1/4-20 UNC-2A
25°
2°
102 [4]
128 [5]
141 [5 9/16]
Ø45 [1 3/4]
Ø12 [1/2]
Ø28 [1 1/8]
Ø25 [1]
Ø40 [1 9/16]
5 [3/16]
123 [4 13/16]
147 [5 13/16]
160 [6 5/16]
15 [9/16]
35 [1 3/8]
33 [1 5/16]
20 [13/16]MAX
1/2-14 PF
429 [16 7/8]
265 [10 7/16]
202 [7 15/16]
351 [13 13/16]
223 [8 3/4]
7°
45°
45°
90 [3 9/16]
Ø8 [5/16]
100 [3 15/16]
Ø26 [1]
45 [1 3/4]
43 [1 11/16]
11°
46 [1 13/16]
58 [2 5/16]
Ø43 [1 11/16]
L: 310[12 3/16]
M15*1.0
L: 600[23 5/8]
1/2-14 NPSM
L: 1500[59 1/16]
M15*1.0