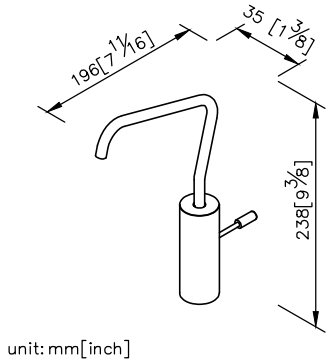
196[7 11/16]
35 [1 3/8]
238[9 3/8]
unit: mm[inch]

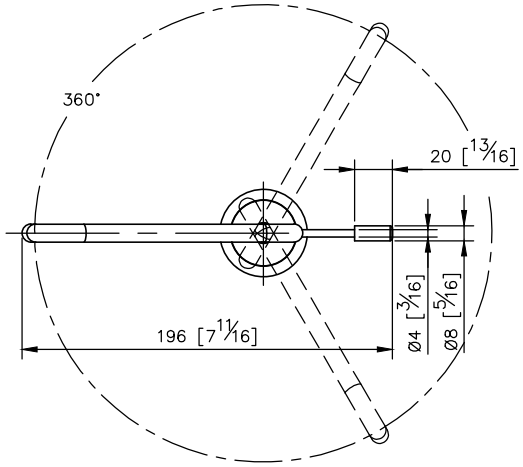
360°
20 [13/16]
196 [7 11/16]
Ø4 [3/16]
Ø8 [5/16]

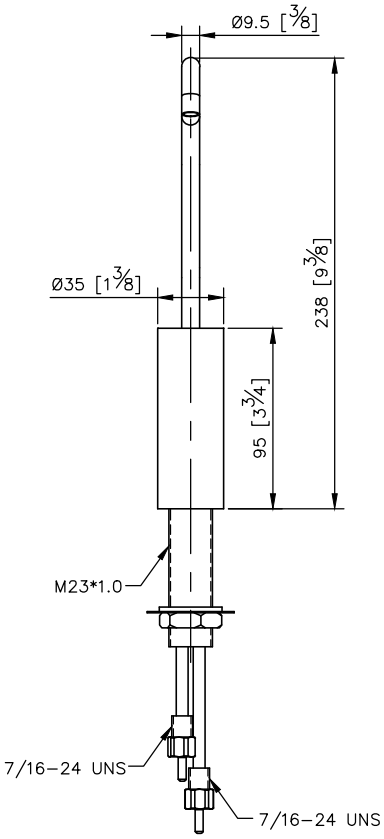
Ø9.5 [3/8]
Ø35 [1 3/8]
238 [9 3/8]
95 [3 3/4]
M23*1.0
7/16–24 UNS
7/16–24 UNS

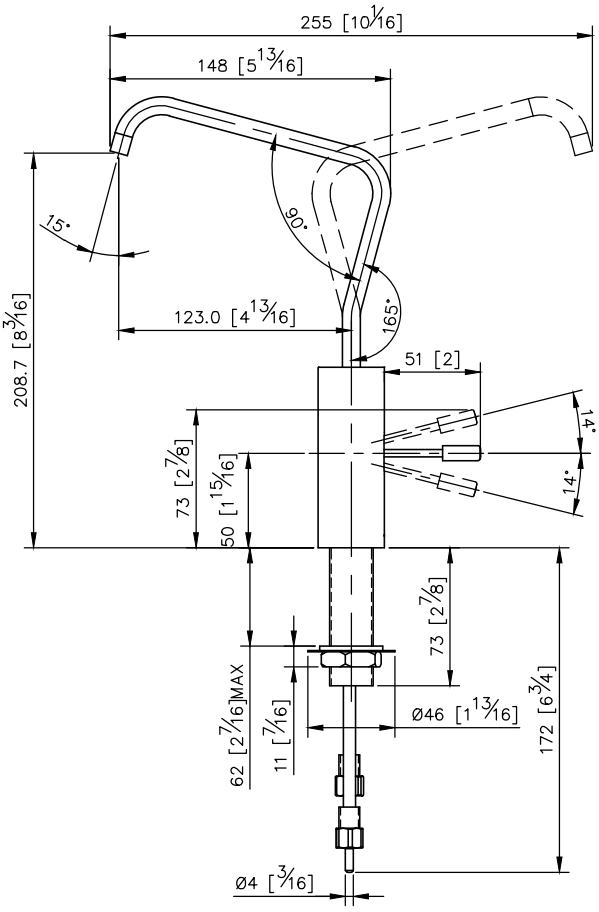
255 [10 1/16]
148 [5 13/16]
15°
90°
165°
208.7 [8 3/16]
123.0 [4 13/16]
51 [2]
14°
14°
73 [2 7/8]
50 [1 15/16]
73 [2 7/8]
62 [2 7/16]MAX
11 [7/16]
Ø46 [1 13/16]
172 [6 3/4]
Ø4 [3/16]