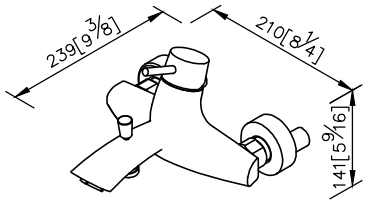
239[9 3/8]
210[8 1/4]
141[5 9/16]

unit: mm[inch]

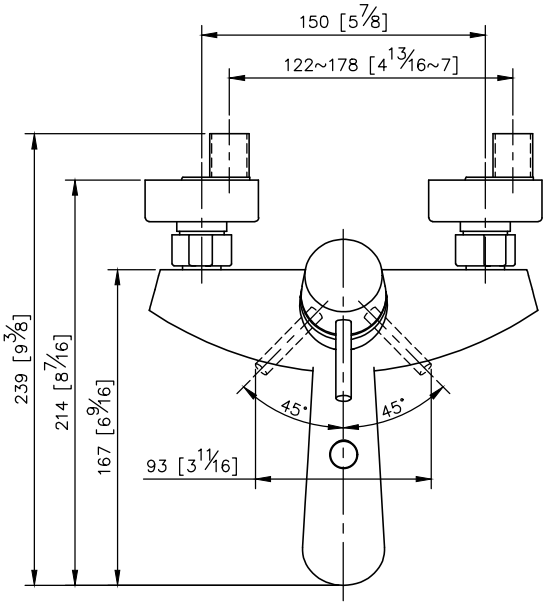
150 [5 7/8]
122~178 [4 13/16~7]
239 [9 3/8]
214 [8 7/16]
167 [6 9/16]
93 [3 11/16]
45°
45°

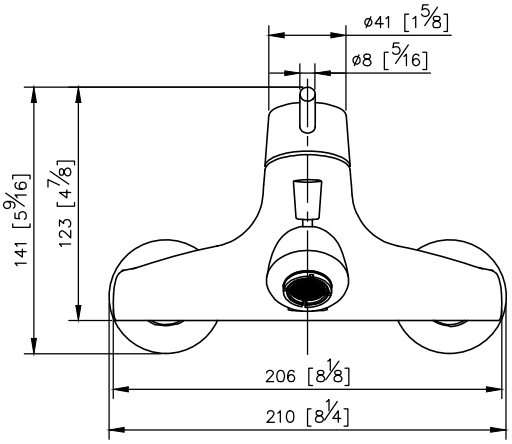
ø41 [1 5/8]
ø8 [5/16]
141 [5 9/16]
123 [4 7/8]
206 [8 1/8]
210 [8 1/4]

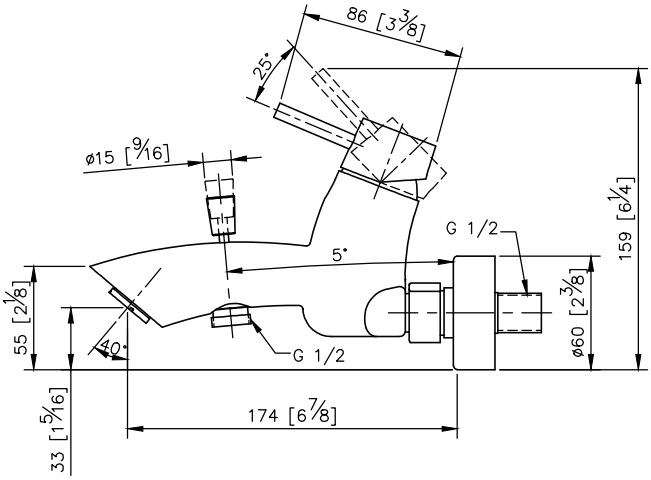
86 [3 3/8]
25°
ø15 [9/16]
G 1/2
5°
159 [6 1/4]
55 [2 1/8]
40°
G 1/2
ø60 [2 3/8]
33 [1 5/16]
174 [6 7/8]