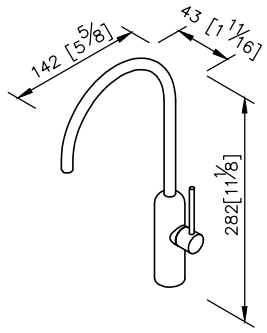
142 [5 5/8]
43 [1 11/16]
282[11 1/8]

unit: mm[inch]

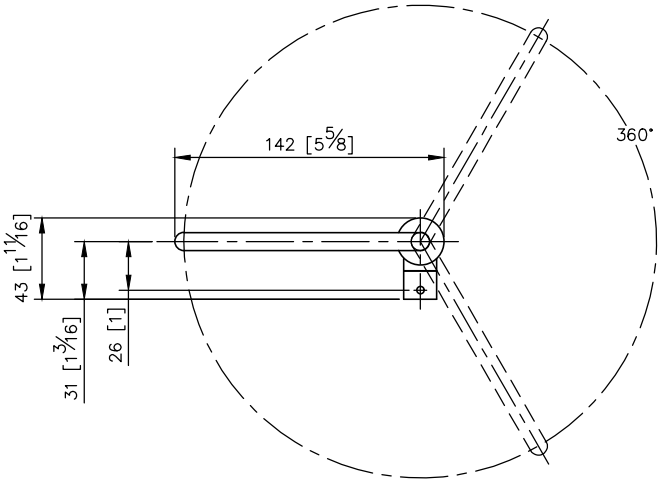
142 [5 5/8]
360°
43 [1 11/16]
31 [1 3/16]
26 [1]

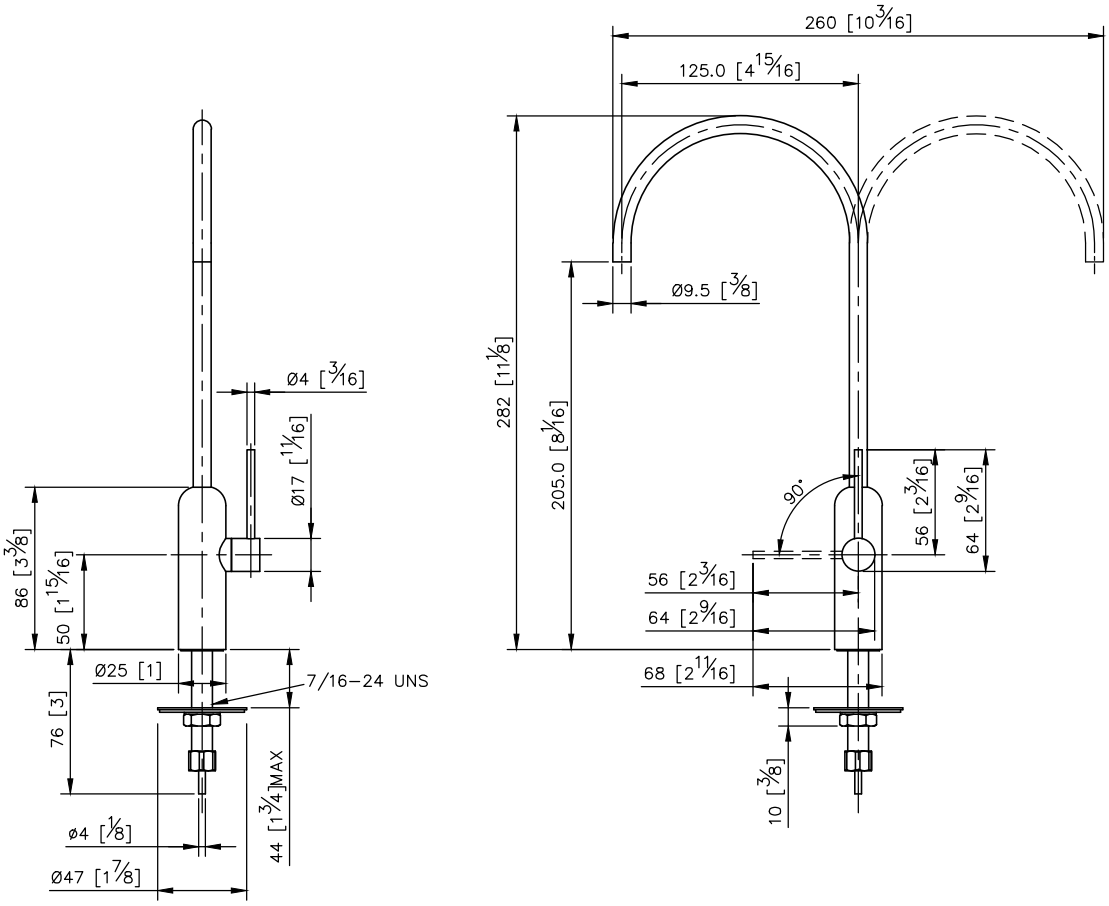
260 [10 3/16]
125.0 [4 15/16]
Ø9.5 [3/8]
282 [11 1/8]
205.0 [8 1/16]
90°
56 [2 3/16]
64 [2 9/16]
56 [2 3/16]
64 [2 9/16]
68 [2 11/16]
10 [3/8]
Ø4 [3/16]
Ø17 [11/16]
86 [3 3/8]
50 [1 15/16]
Ø25 [1]
7/16-24 UNS
76 [3]
44 [1 3/4]MAX
ø4 [1/8]
Ø47 [1 7/8]