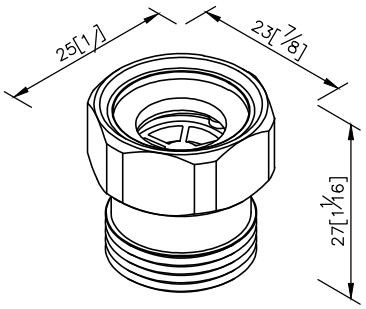
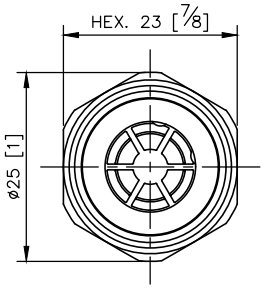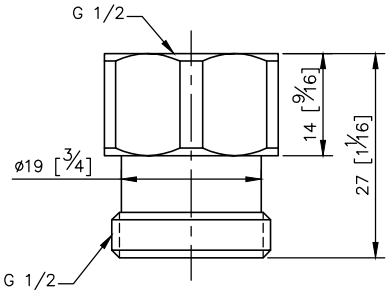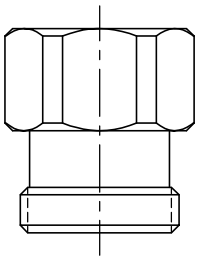
unit: mm[inch]