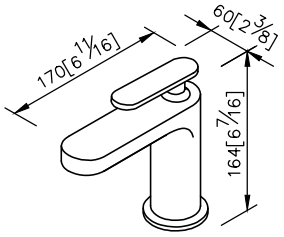
170[6 11/16]
60[2 3/8]
164[6 7/16]

unit: mm[inch]

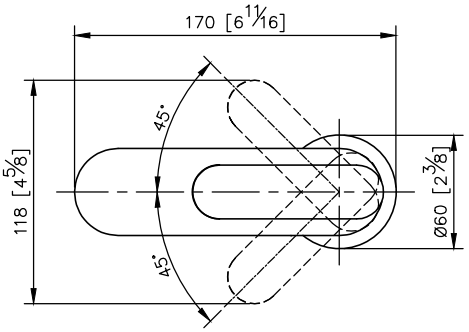
170 [6 11/16]
45°
45°
118 [4 5/8]
Ø60 [2 3/8]

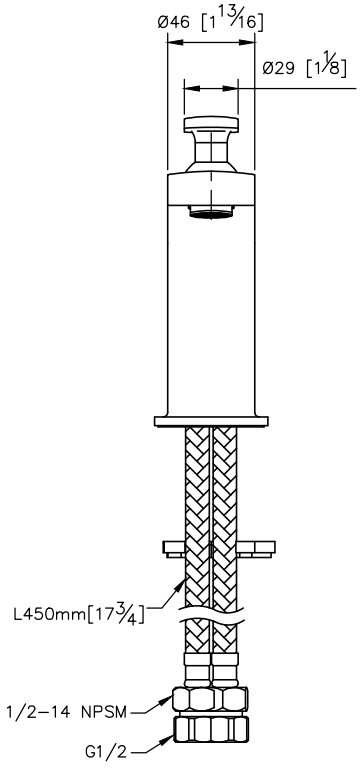
Ø46 [1 13/16]
Ø29 [1 1/8]
L450mm[17 3/4]
1/2-14 NPSM
G1/2

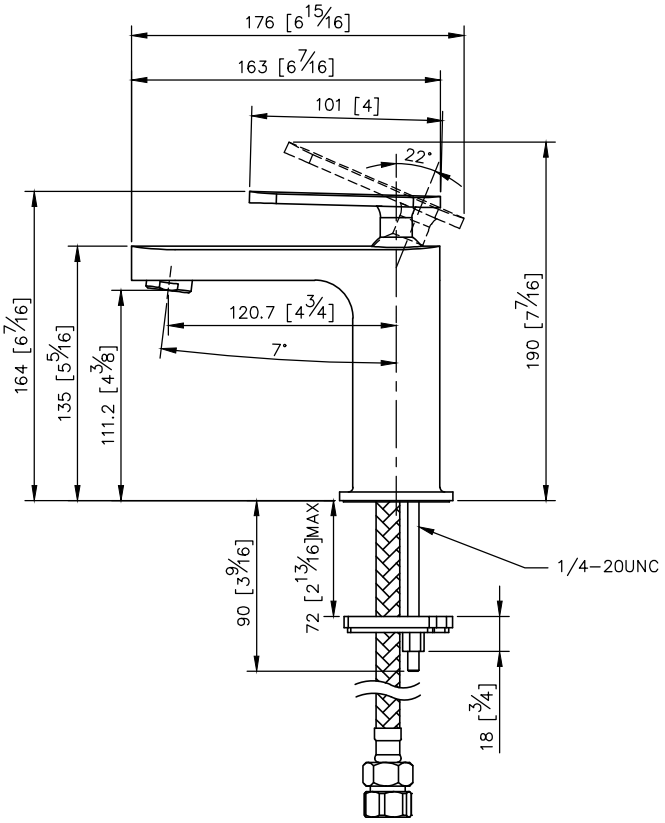
176 [6 15/16]
163 [6 7/16]
101 [4]
22°
120.7 [4 3/4]
7°
164 [6 7/16]
135 [5 5/16]
111.2 [4 3/8]
190 [7 7/16]
90 [3 9/16]
72 [2 13/16]MAX
1/4-20UNC
18 [3/4]