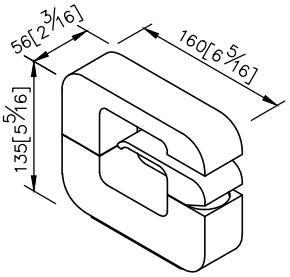
56[2 3/16]
160[6 5/16]
135[5 5/16]

unit: mm[inch]

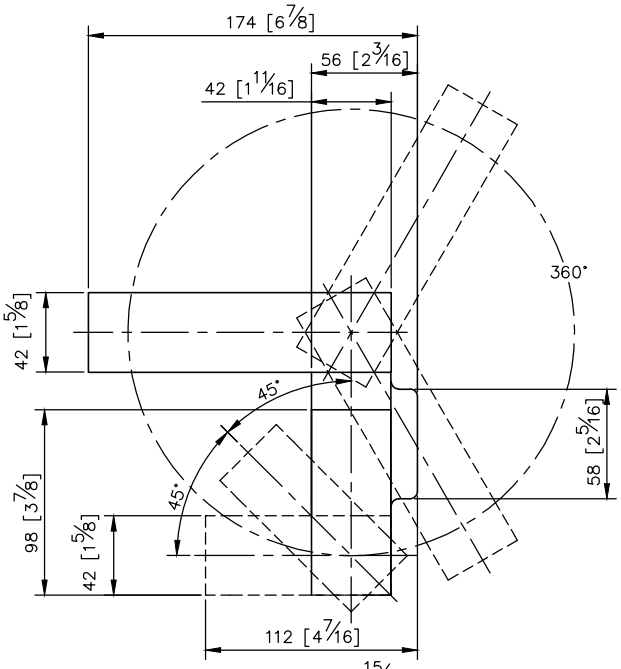
174 [6 7/8]
56 [2 3/16]
42 [1 11/16]
360°
42 [1 5/8]
45°
45°
58 [2 5/16]
98 [3 7/8]
42 [1 5/8]
112 [4 7/16]

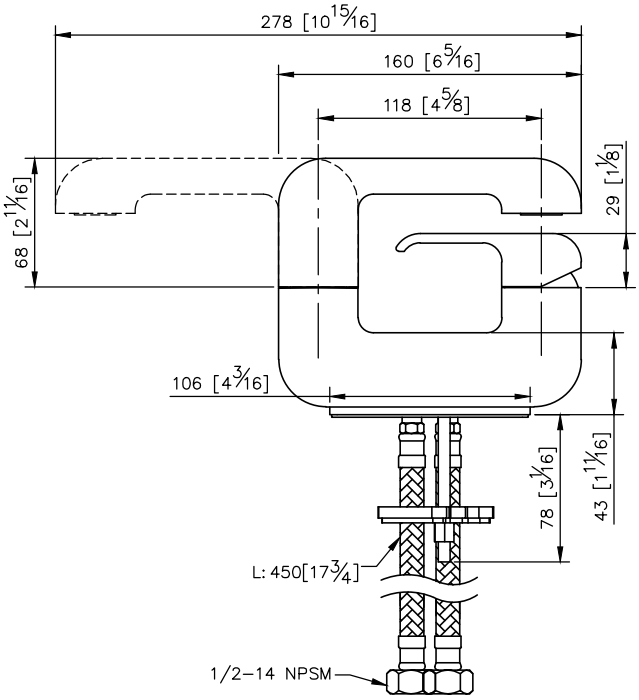
278 [10 15/16]
160 [6 5/16]
118 [4 5/8]
29 [1 1/8]
68 [2 11/16]
106 [4 3/16]
78 [3 1/16]
43 [1 11/16]
L: 450[17 3/4]
1/2-14 NPSM

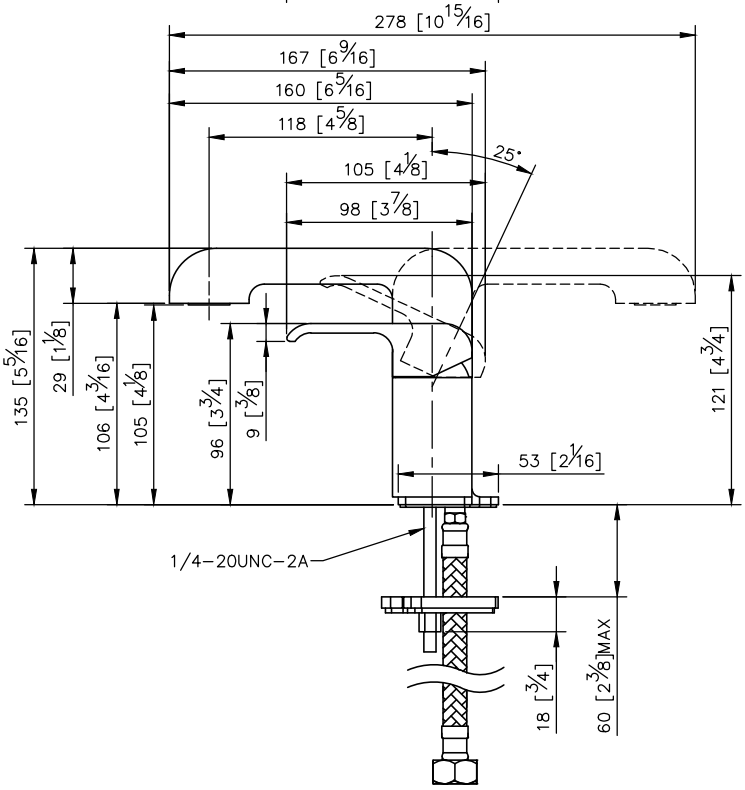
278 [10 15/16]
167 [6 9/16]
160 [6 5/16]
118 [4 5/8]
105 [4 1/8]
98 [3 7/8]
25°
135 [5 5/16]
29 [1 1/8]
106 [4 3/16]
105 [4 1/8]
96 [3 3/4]
9 [3/8]
121 [4 3/4]
53 [2 1/16]
1/4-20UNC-2A
18 [3/4]
60 [2 3/8]MAX